Differential pressure gauges with Bourdon tube

Nominal dia. 100 and 160
with movement of Brass or stainless steel

measuring
•
monitoring
•
analysing

Features

- High reliability and durability
- Compact movement
- Differential pressure given on indicating dial
- Accuracy class 1.6
- Static pressure indicated for both sides
- Movement Brass or st. st.
- Dual scale bar/mWS

Description

These pressure gauges are suitable for measuring of liquid and gaseous medias, although this should not be viscous or susceptible to crystallization. For aggressive media, which attack brass, other versions with stainless steel medium wetted parts are available.

The two independently indicating Bourdon tube measuring systems work in a stardy housing.

Both pointers turn around the same axle and indicate the values separately. The pointer on the low-pressure side has the form of a dial. On this dial the pressure difference between the low and high pressure side is given which may not exceed 50% of the full measuring range. Each single value can be read off directly .

Ranges

0...0.6 bar to 0...600 bar

Applications

Industrial heaters, filter-monitoring, water-recycling plant

KOBOLD Messring GmbH
Nordring 22-24
D-65719 Hofheim/Ts.
☎ (06192) 299-0
Fax (06192) 23398
E-mail: info.de@kobold.com
Internet: www.kobold.com

Technical data

Model MAN	DF 12...	DG 12...	DF 16...	DG 26...	Options
Nominal size	100 mm	160 mm	100 mm	160 mm	
Symbol	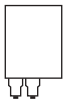				
Measuring system	Two independantly indicating Bourdon tube measuring systems				
Accuracy class	1.6 to DIN 16005				
Version	Standard		stainless steel version		
Indicating range [2]	0...0.6 bar to 0...600 bar negative or positive or negative/positive gauge pressure				
Max. pressure	Static load: up to full scale value Alternating load: 0.9 times full scale value Short-term: 1.3 times full scale value				
Housing	steel, black			stainless steel	back flange
Ring	steel, black			stainless steel	front flange
Window	Glass		laminated safety glass		laminated safety glass
Dial	Aluminum, white, scale and printing black, double scale bar/mWS				
Pointer	+) Standard pointer: Aluminum, black -) Pointer scale: Aluminum white, scaled ±50% of main scale range				marker pointer
Movement	Brass, bearing parts argentun			stainless steel	
Measuring element	< 100 bar: Brass; ≥ 100 bar: stainless steel 1.4571; < 100 bar: C Bourdon tube, ≥ 100 bar helical tube		stainless steel 1.4571		
Connection - position - thread	Brass bottom radial, parallel entry 2 x G 1/2 male, DIN 16 288, HEX 22		stainless steel 1.4571		other threads on request
Temperatures - medium - ambient	Tmin. -20°C, Tmax. +60°C [5] Tmin. -20°C, Tmax. +60°C		Tmin. -20°C, Tmax. +100°C		
Temperature behaviour	0.3% / 10K on deviation from normal temperature +20°C				
Protection	IP 33 acc. DIN 40 050 (EN 60 529 / IEC 529)				
Throttle					ø 0.4; ø 0.8
Weight approx.	1.0 kg	1.6 kg	1.0 kg	1.6 kg	

[2] Scale range must be selected in consideration of the highest static pressure applied! In heating circuits with circulating pumps the total pressure is calculated pressure given by the pump plus water column above. The pressure differential to be indicated should be no less than 1/8 of the full scale range. When ordering please state both:
a) static pressure applied, b) differential pressure to be indicated.

[5] Tmax. +100°C brazed

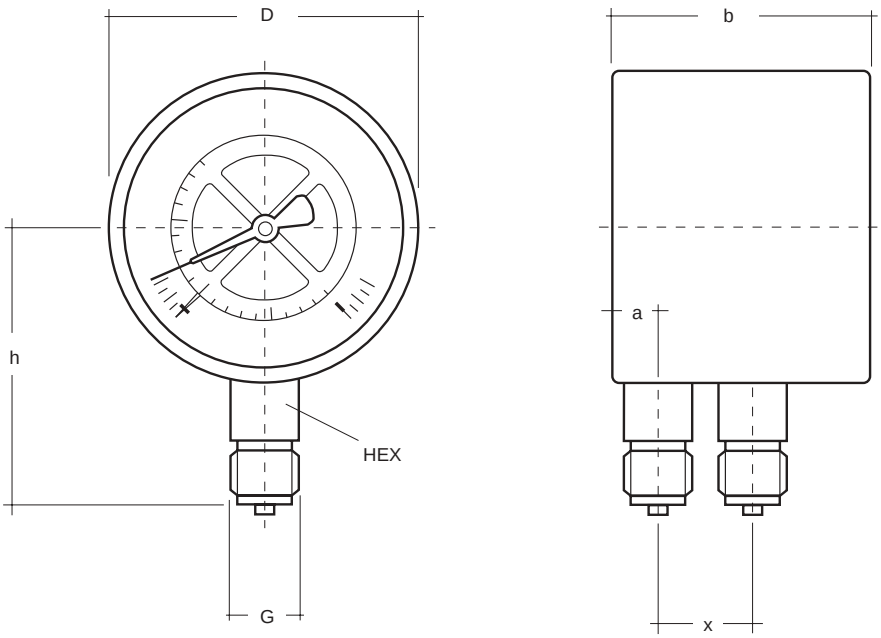

Dimensions

Model	Dia.	Dimensions (mm)						
		a ± 0.5	b ± 1	X ± 1	D ± 1	G	h ± 1	HEX
PF 12..., PF 16...	100	15.5	82	32	100	G1/2 male	87	22
PG 12..., PG 16...	160	15.5	86.5	32	160	G1/2 male	118	22

Differential pressure gauges with diaphragm element

Nominal dia. 100, 160; with or without damping
with or without electrical alarm contacts

measuring • monitoring • analysing

Features

- Measuring element aluminium
- Housing and Bayonet ring made of stainless steel
- Inductive or magnetic-spring contact
- Precise display and durability resulting from liquid damping

Description

These differential pressure gauges are suitable for harsh conditions resulting from high demands on pressure measurement in industrial production plants. Depending on the application, the instruments can also be filled with damping fluid.
Gauges with liquid filling are damped thus eliminating pressure pulses or mechanical vibrations.
This prolongs the service life and the gauge display remains largely vibration free.

Differential pressure gauges with electrical alarm contacts are suitable for controlling or regulating process sequences with the aid of the process pressure. The media, non aggressive gases or liquids, should not be too viscous or tend to cristallize.

Principle

The process medium chambers (+) and (-) are separated by a diaphragm. The difference in pressure between the (+) and (-)-medium chambers deflects the diaphragm.
This deflection (measured travel) is transmitted to the pointer via a push rod causing a pointer deflection in proportion to the difference in pressure.

Ranges

0…25 mbar to 0…25 bar

Applications

Level measurement, filter monitoring, air-conditioning technology, flow measurement

KOBOLD Messring GmbH
Nordring 22-24
D-65719 Hofheim/Ts.
☎ (06192) 299-0
Fax (06192) 23398
E-mail: info.de@kobold.com
Internet: www.kobold.com

Model MAN	DF2A...	DG2A...	DF2AM...	DG2AM...	DF2AI...	DG2AI...	Options
Nominal size	100 mm	160 mm	100 mm	160 mm	100 mm	160 mm	
Symbol							
Contact type	none		magnetic-spring		inductive		current output 4...20 mA
Number of contacts	none		3		2		four magnetic spring
Position of cable connection	none		right side, PG 13.5				plug connection
Accuracy class	1.6 to DIN 16005						
Indicating range	0...25 mbar to 0...250 mbar (measuring cell DN 149) 0...0.4 bar to 0...25 bar: (measuring cell DN 85) negative or positive or negative/positive gauge pressure						0...16 mbar scale approx. 180°
Version	for max. total overpressure (static pressure) see table 1						
Overload protection	(+) or (-) side max. see table 1						
Max. pressure	static load: up to full scale value alternating load: 0.9 times full scale value						
Housing	stainless steel, 1.4301, with blow-out disc						liquid filling
Ring	stainless steel 1.4301, bayonet ring						front flange
Window	Instrument glass						laminated safety glass
Dial	aluminum white, scale and printing black acc. DIN 16 109						special scales
Pointer	aluminum, black micro adjustment pointer		aluminum black acc. DIN 16 099				
Movement	Brass						zeropoint adjustment
Measuring element	st. st., 1.4571 ≤ 2.5 bar NiCrCo alloy, Duratherm 600 ≥ 4 bar						special materials
Sealings	NBR (in contact with medium)						FPM
Connection - position - thread	aluminum alloy bottom radial 2 x G 1/4 female, DIN 16288, Form Z						back
Measuring flanges	aluminum alloy						with venting
Temperatures - medium - ambient	 Tmin. -20°C, Tmax. +60°C Tmin. -20°C, Tmax. +60°C						
Temperature behaviour	0.3% / 10K on deviation from normal temperature +20°C						
Protection	IP 54 acc. DIN 60529 / EC529						IP 65

Special accessories: pressure-compensating valve (1 - 5 spindles)

Electrical data and switching functions, see data sheet
Electrical accessories, see data sheet

Table 1

Indication range	mbar 0...16 to 0...25	bar 0...4 to 0...6	0...1	0....1.6	0...2.5 to 0...10	0...16 to 0...25
Max. total overpressure (static pressure)	2.5 bar	10 bar				25 bar
Overload limit (+) and (-) side	2.5 bar	3	5	8	10	25

04/0102/Ko/10

Standard model

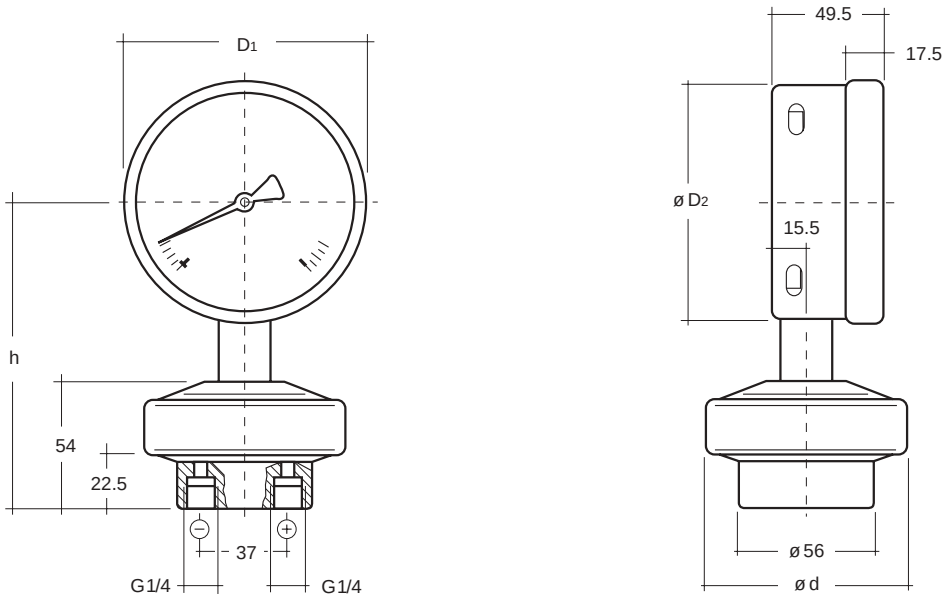

Dia.	Ranges (bar)	Dimensions (mm) D1	D2	d	G	h ± 1	Weight (kg) 1)
100	≤ 0.25	101	99	149	G 1/4	120	1.85
	≥ 0.40	101	99	85	G 1/4	120	1.00
160	≤ 0.25	161	159	149	G 1/4	150	2.25
	≥ 0.40	161	159	85	G 1/4	150	1.40

1) Weights of instruments with filling on request

Model with alarm contacts

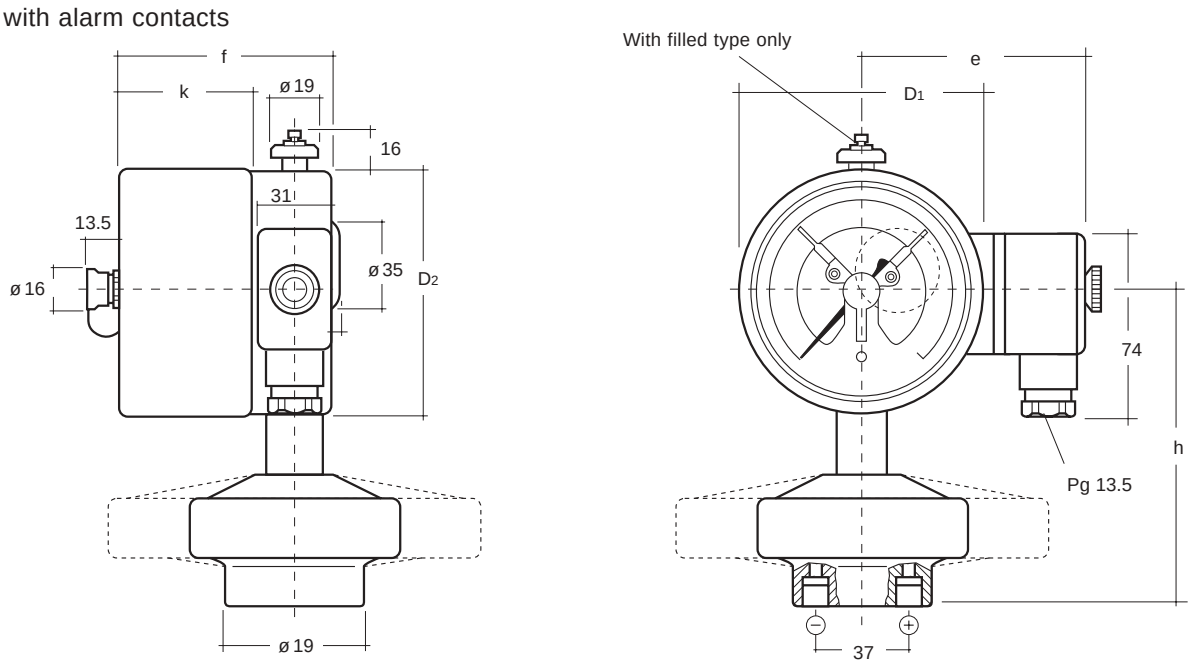

Dia.	Dimensions (mm) D1	D2	e	f ± 1	h ± 1	k
100	101	99	94	88	130	55
160	161	159	124	101	160	17.5

04/0102/Ko/10

Pressure switches please refer...

... to our brochure “P3”.

04/0102/Ko/10

All stainless steel differential pressure gauges with electrical alarm contacts or current output

with or without liquid filling
Nominal dia. 100, 160; accuracy class 1.6

measuring • monitoring • analysing

Features

- Resistant to aggressive media and the environment
- High overload protection
- Solid front design
- Alarm contacts or current output
- Precise display resulting from liquid damping
- Flushing and vent connection for the measuring chamber

Description

The process medium chambers (+) and (-) are separated by a diaphragm. The difference in pressure between the (+) and (-)-medium chambers deflects the diaphragm. This deflection (measured travel) is transmitted to the pointer via a push rod causing a pointer deflection in proportion to the difference in pressure.
Metal bellows seal the two pressure chambers away from the gauge case. Metal supporting elements guarantee overload protection. The two downward outgoing process connections (G1/4 female, DIN 16288, Z type) are made of corrosion resistant material.
For mounting purposes, it should be noted that: (+) represents high pressure and (-) low pressure input.
The pressure connection position may be varied according to the installation conditions.
The measuring element is tamper proof.
The gauges can be used with gaseous, liquid and also chemically aggressive media as well as in aggressive environments, but not with highly viscous or crystallizing media.

Description of function

1. Measuring diaphragm
2. Metallic bellows
3. Connecting rod
4. Movement

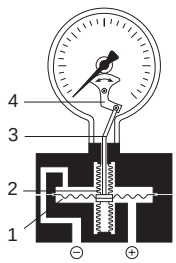

Ranges

0…16 mbar to 0…25 bar and all corresponding ranges for negative and positive overpressure

Applications

Level measurement, filter monitoring; flow measurement; chemical and process engineering; food industry

KOBOLD Messring GmbH
Nordring 22-24
D-65719 Hofheim/Ts.
☎ (06192) 299-0
Fax (06192) 23398
E-mail: info.de@kobold.com
Internet: www.kobold.com

	-		With alarm contacts 1)				With current output 2)		Options
Model MAN	DF 25	DG 25	DF 25 M 1...	DG 25 M 1...	DF 25 I 2...	DG 25 I 2...	DF 25 (A4),(A0)	DG 25 (A4),(A0)	
Nominal size	100	160	100	160	100	160	100	160	
Symbol	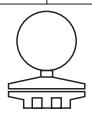								
Fluid filling	none								
Contact type	none		magnetic-spring contact		inductive contact		current output		
Contact function			M 1 3)		I 2 3)		0...20 mA 4...20 mA		voltage output: 0-5 V, 0-10 V alarm contact: for further contact functions see "mounting options" table
Accuracy class	1.6 to DIN 16005								1.0
Indicating range	0...16 bar to 0...25 bar plus all corresponding ranges for negative and positive gauge pressure								
Max. pressure	static load: up to full scale value alternating load: 0.9 times full scale value								
Overload protection	(+) or (-) side: 10 times of full scale value, but only up to max. total pressure (static pressure) 10/25 bar see table as well								
Max. total overpressure (static pressure)	range 0...16 mbar to 0...250 mbar: max. 10 bar range 0...400 mbar to 0...25 bar: max. 25 bar								
Housing	stainless steel 1.4301 with blow-out disc								solid front version to DIN 16006
Bezel	bayonet ring, stainless steel 1.4301, bright								
Mounting	rigid measuring tube								Measuring gauge holder for wall or pipe mounting dia. 2"/dia. 62 or mounting bore in flange
Window	laminated safety glass								
Dial	aluminum, white, scale and printing black (DIN 16109)								
Pointer	adjustable pointer, aluminum, black								
Movement	stainless steel								zero-point adjustment
Measuring element	≤ 250 mbar: stainless steel 1.4571, > 250 mbar NiCrCo-alloy (Duratherm)								
Measuring chamber, connection - position - thread	stainless steel 1.4571 bottom, (DIN 16288, symbol Z) 2 x G 1/4 female								connection left, right, rear connection: male thread
Protection	IP 45 acc. DIN 40 050								
Temperatures - medium - ambient	max. +100 °C min. -20 °C, max. +60 °C								medium: 130 °C
Accessories									valve block (3-spindle pressure-compensation and shut-off valve). Attachment of diaphragm seal on request
Electrical connection			Cable socket PA 6 cable gland PG 13.5				Cable set PG 13.5		

Maximum total overpressure/overload protection

Range	Max. total overpressure (static pressure)	Overload protection on both sides max.
0...16 mbar to 0...40 mbar	2.5 bar	2.5 bar
0...60 mbar to 0...250 mbar	6 bar	2.5 bar
0...400 mbar	25 bar	4.0 bar
0...0.6 bar	25 bar	6.0 bar
0...1 bar	25 bar	10 bar
0...1.6 bar	25 bar	16 bar
0...2.5 to 0...25 bar	25 bar	25 bar

1) Electrical alarm contacts: see separate leaflet
2) Electrical current outputs: see separate leaflet
3) Switch functions for inductive and magnetic-spring contacts
- clockwise pointer motion: normally closed (N/C) or normally open (N/O)
- The letter charcterizes the contact designation
  Code "M" for magnetic snap-action contact
  Code "I" for inductive contact
- Following numbers indicate the switching operation
  1: normally open (N/O)
  2: normally closed (N/C)
  3: single pole double throw (SPDT)
- The quantity of numbers indicate the quantity of contacts

04/0102/Ko/10

	With liquid filling		With alarm contacts 1) and liquid filling				With current output and liquid filling 2)		Options
Model MAN	DF 75	DG 75	DF 75 M 1...	DG 75 M 1...	DF 75 I 2...	DG 75 I 2...	DF 75 (A4),(A0)	DG 75 (A4),(A0)	
Nominal size	100	160	100	160	100	160	100	160	
Symbol	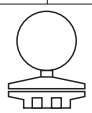								
Fluid filling	glycerine		silicone oil						
Contact type	none		magnetic-spring contact		inductive contact		current output		
Contact function			M 1 3)		M 2 3)		0...20 mA 4...20 mA		voltage output: 0-5 V, 0-10 V alarm contact: for further contact functions see "mounting options" table
Accuracy class	1.6 to DIN 16005								1.0
Indicating range	0...16 bar to 0...25 bar plus all corresponding ranges for negative and positive gauge pressure								
Max. pressure	static load: up to full scale value alternating load: 0.9 times full scale value								
Overload protection	(+) or (-) side: 10 times of full scale value, but only up to max. total pressure (static pressure) 10/ 25 bar see also table								
Max. total overpressure (static pressure)	range 0...16 mbar to 0...250 mbar: max. 10 bar range 0...400 mbar to 0...25 bar: max. 25 bar								
Housing	stainless steel 1.4301 with blow-out disc								solid front version to DIN 16006
Bezel	bayonet ring, stainless steel 1.4301, bright								
Mounting	rigid measuring lead								Measuring gauge holder for wall or pipe mounting dia. 2"/dia. 62 or mounting bore in flange
Window	laminated safety glass								
Dial	aluminum, white, scale and printing black (DIN 16109)								
Pointer	adjustable pointer, aluminum, black								
Movement	stainless steel								zero-point adjustment
Measuring element	≤ 250 mbar: stainless steel 1.4571, > 250 mbar NiCrCo-alloy (Duratherm)								
Measuring chamber, connection - position - thread	stainless steel 1.4571 bottom, (DIN 16288, type Z) 2 x G 1/4 female								connection left, right, rear connection: male threads
Protection	IP 65								
Temperatures - medium - ambient	max. +100 °C min. -20 °C, max. +60 °C								medium: 130 °C
Accessories									valve block (3-spindle pressure-compensation and shut-off valve). Attachment of diaphragm seal on request
Electrical connection			cable socket PA 6 cable gland PG 13.5				cable socket PA 6 gland PG 13.5		

Note for installation: (-) low pressure; (+) high pressure

1) Electrical alarmcontacts: see separate leaflet
2) Electrical current outputs: see separate leaflet
3) Switch functions for inductive and magnetic-spring contacts
- clockwise pointer motion: normally closed (N/C) or normally open (N/O)
- The letter charcterizes the contact designation
  Code "M" for magnetic snap-action contact
  Code "I" for inductive contact
- Following numbers indicate the switching operation
  1: normally open (N/O)
  2: normally closed (N/C)
  3: single pole double throw (SPDT)
- The quantity of numbers indicate the quantity of contacts

Standard version: Model BR DF 25..., DG 25...
Connection 2 x G 1/4 female threads, bottom

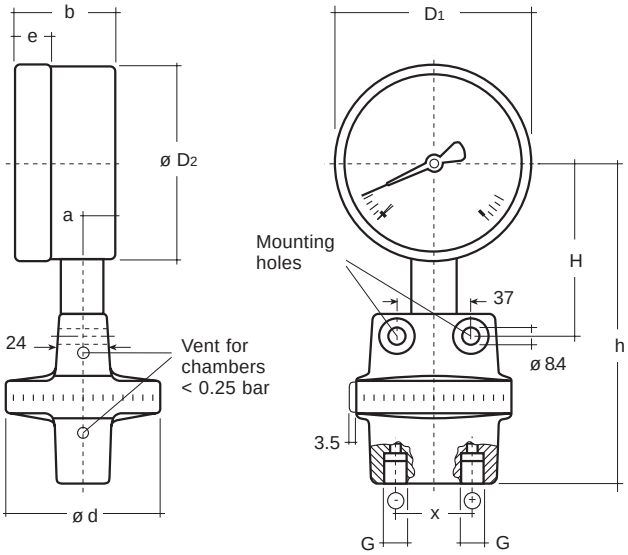

Option
Connection 2 x G 1/4 female thread, right hand side

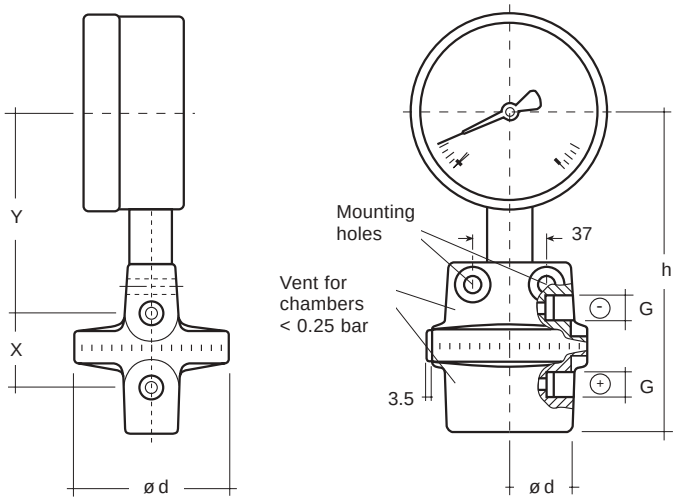

Dia.	Range (bar)	Dimensions (mm)												Weight (kg)
		a	b	D_1	D_2	d	e	G	h ± 1	H	X	Y	Z	
100	≤ 0.25	15.5	49.5	101	99	140	17.5	G 1/4	161	87	37	99	69	2.70
	≤ 0.25	15.5	49.5	101	99	78	17.5	G 1/4	161	87	37	99	35	1.40
100	≤ 0.25	15.5	49.5	161	159	140	17.5	G 1/4	191	117	37	129	69	3.40
	≤ 0.25	15.5	49.5	161	159	78	17.5	G 1/4	191	117	37	129	35	2.10

Connection to DIN 16288, type Z

Installation options for alarm contacts

Pressure gauge		Alarm contact							
Model	Nominal size	Magnetic-spring contact				Inductive contact			
		Number of contacts							
		1	2	3	4 [5]	1	2	3 [6]	-
		Full scale value from ... bar							
DF 25 M 1... DG 25 M 1...	100 160	0.016	0.016	0.040	0.040				
DF 25 I 2... DG 25 I 2...	100 160					0.016	0.016	0.040	
DF 75 M 1... DG 75 M 1...	100 160	0.016	0.016	0.040	0.040				
DF 75 I 2... DG 75 I 2...	100 160					0.016	0.016	0.040	

[5] Possible only as special version [6] Possible only as special version

Installation options for current outputs

Pressure gauge			Current output			Current output and alarm contacts				
Model	Nom. size	Pressure connection	Standard	Explosion proof version [6]	Standard with power supply unit [6]	Current output				
						Standard		Explosion proof version [6]	Standard with power supply unit	
						Alarm contact				
						Magnetic spring	Inductive	Inductive	Magnet-spring	Inductive
DF 25 (A4),(A0) DG 25 (A4),(A0)	100 160	bottom bottom/side	•	•	•					
DF 75 (A4),(A0) DG 75 (A4),(A0)	100 160	bottom bottom/side	•	•	•					
Option										
unfilled	100 160	bottom bottom/side				•	•	•	•	•
filled	100 160	bottom bottom/side				•	•	•	•	•

All stainless steel differential pressure gauges

Nominal dia. 100, 160; with or without damping
with or without electrical alarm contacts
with or without current output

measuring
•
monitoring
•
analysing

Features

- Measuring cell and housing of corrosion resistant materials, stainless steel
- Static pressure and overrange protection to 40 bar or optional 100 bar
- Alarm contacts or current output
- Flushing and vent connection on measuring chamber
- Differential pressure connection to DIN 19213
- Vibration-free indication and durability by liquid filling

Description

These differential pressure gauges are suitable for harsh conditions resulting from high demands on pressure measurement in production plants of the chemical or other comparable industries. By using high quality stainless steel for both measuring system and housing guarantees resistance against aggressive media and environment. Depending on their applications, the instruments can also be filled with damping fluid.
Gauges with liquid filling eliminate pulses or mechanical vibrations. This prolongs the service life and the gauge display remains largely vibration free.

Differential pressure gauges with electrical alarm contacts are suitable for controlling or regulating process sequences with the aid of the process pressure.

Principle

The heart of these differential pressure gauges is the measuring cell with two "hydraulically" coupled diaphragm elements, between which the pressure transmitting fluid is enclosed. If both diaphragm elements are subjected to different pressures this is transmitted to the movement which causes a deflection of the pointer proportional to the differential pressure.

Ranges

0…60 mbar to 0…25 bar

Applications

Level measurement, filter monitoring, flow measurement with a differential pressure probe

KOBOLD Messring GmbH
Nordring 22-24
D-65719 Hofheim/Ts.
☎ (06192) 299-0
Fax (06192) 23398
E-mail: info.de@kobold.com
Internet: www.kobold.com

Model MAN	DF2G	DG2G...	DF2GM...	DG2GM...	DF2GI...	DG2GI...	DG2G...A4	Options
Nominal size	100	160	100	160	100	160	160	
Symbol	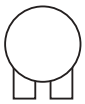							
Contact type / electrical output	none		magnetic-spring		inductive		4...20 mA two wire	1)
Number of contacts	none		3		3		none	
Position of cable connection	none		right hand side, PG 13.5					plug connection 2)
Accuracy class	1.6 to DIN 16005							
Indicating range	0...60 mbar to 0...250 mbar (measuring cell DN 140) 0...0.4 bar to 0...25 bar: (measuring cell DN 80) plus all corresponding ranges for negative and positive gauge pressure							
Version	for max. total overpressure (static pressure) 40 bar							100 bar / 250 bar
Overload protection	(+) or (-) side: max. 40 bar							100 bar / 250 bar
Max. pressure	static load: up to full scale value alternating load: 0.9 times full scale value							
Housing	St. steel 1.4301, bright							liquid filling
Bezel	bayonet ring, stainless steel 1.4301							front flange
Window	laminated safety glass							
Dial	aluminum, white, scale and printing black acc. DIN 16 109							special scale
Pointer	adjustable pointer aluminum, black		aluminum, black acc. DIN 16 099					
Zero-point adjustment	adjustable pointer		adjustable part at housing at top					
Movement	Stainless steel							
Measuring element	St. steel, 1.4571 ≤ 250 mbar NiCrCo alloy, Duratherm 600 ≥ 400 mbar							
Sealing	FPM (in contact with medium)							PTFE
Connection - position - thread 3)	St. steel 1.4571 bottom							
	2 x G 1/2 female (DIN16288, type Z)							differential pressure connection to DIN 19213
Measuring flanges, measuring cell	CrNi steel 1.4571, measuring cell filled with silicone oil							special filling, e.g. for oxygen
Vent of measuring cell	at ranges ≤ 250 mbar							≥ 0.4 bar
Temperatures - medium - ambient	 Tmin. -20 °C, Tmax. +100 °C Tmin. -25 °C, Tmax. +60 °C							
Temperature behaviour	0.4 % / 10 K on deviation from normal temperature +20 °C							
Protection	IP 54 acc. EN 60529 / EC529							IP 65

1) Other electrical outputs on request
2) According to DIN 43 651

Special accessories: pressure-compensating valve (1 - 5 spindles)
3) Pressure-compensating valves with shut-off valves require thread G 1/2 male on instrument

04/0102/Ko/10

Standard model

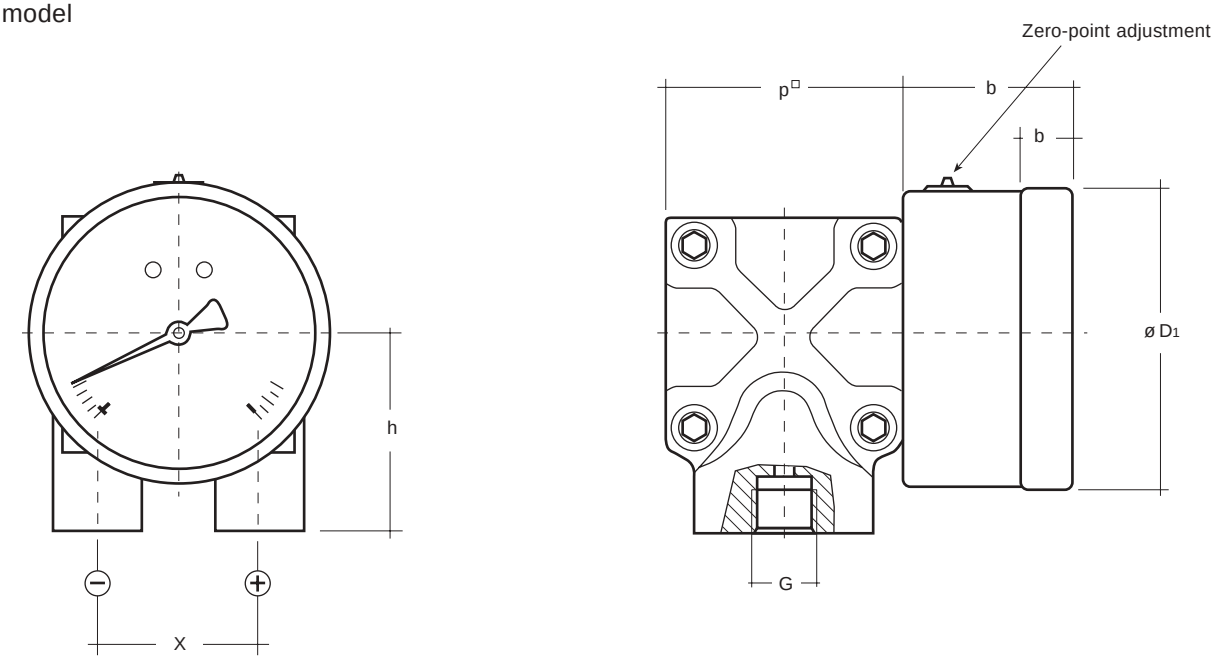

Model	Ranges (bar)	Dimensions (mm)							Weight (kg)
		b	ø D1	e	G	h ± 1	p□	x	
DF 2G...	≤ 0.25	58.5 1)	101	17.5 1)	G 1/2	70	140	54	12.0
	> 0.25	58.5 1)	101	17.5 1)	G 1/2	66	80	54	3.5
DG 2G	≤ 0.25	65.5 2)	161	17.5	G 1/2	70	140	54	12.4
	> 0.25	65.5 2)	161	17.5	G 1/2	66	80	54	3.9

1) Models DF 2G...M, DF 2G...1 with one alarm contact: plus 39 mm
2) Models DF 2G...M, DG 2G...1 with one alarm contact: plus 36 mm
Models DG 2G...A4 with current output: plus 50 mm

Connection to DIN 16288 type Z

Option
Mounting bracket for wall or pipe installation

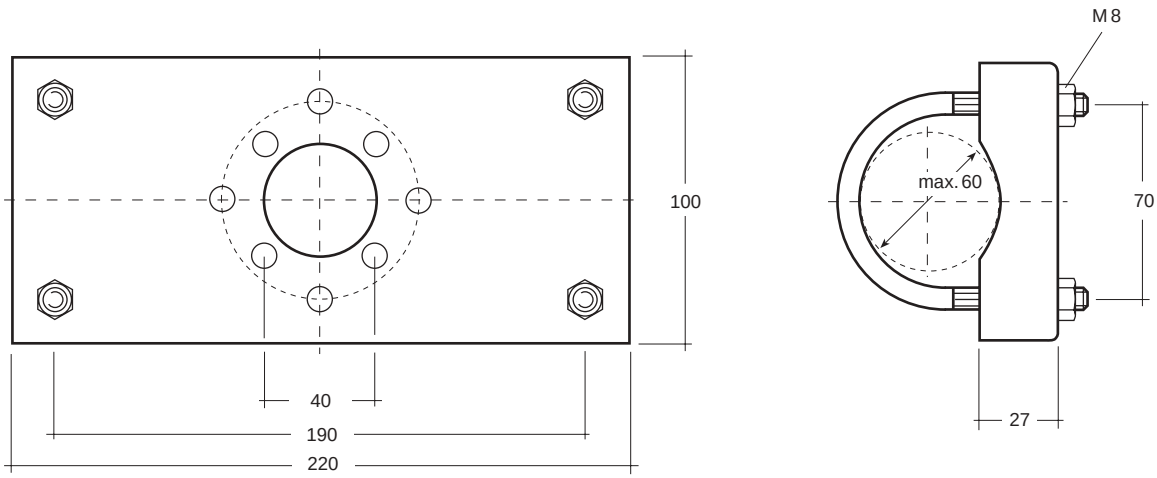

04/0102/Ko/10