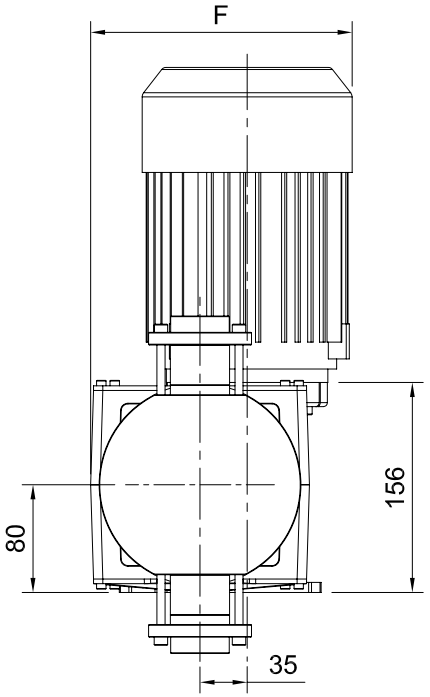


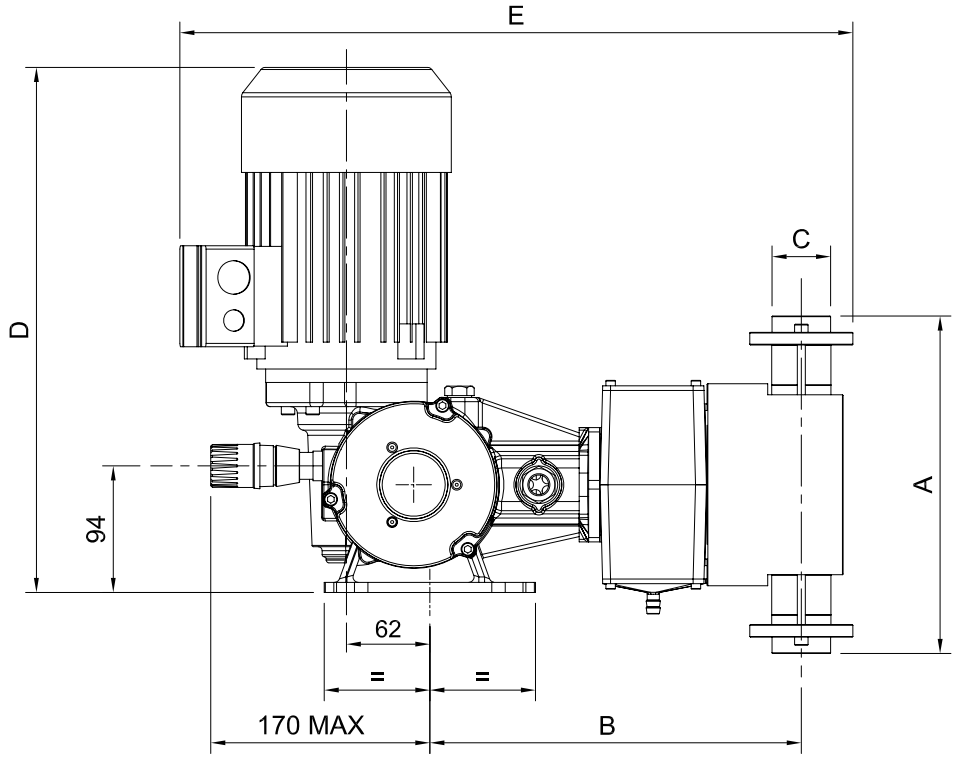


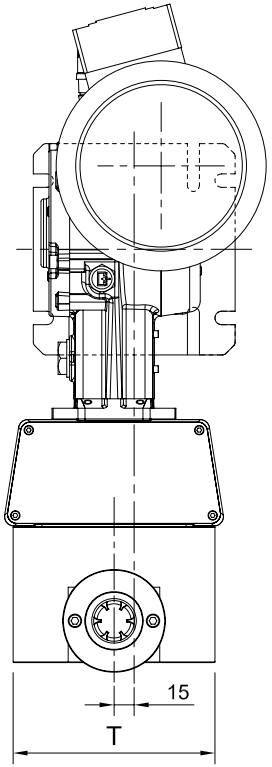


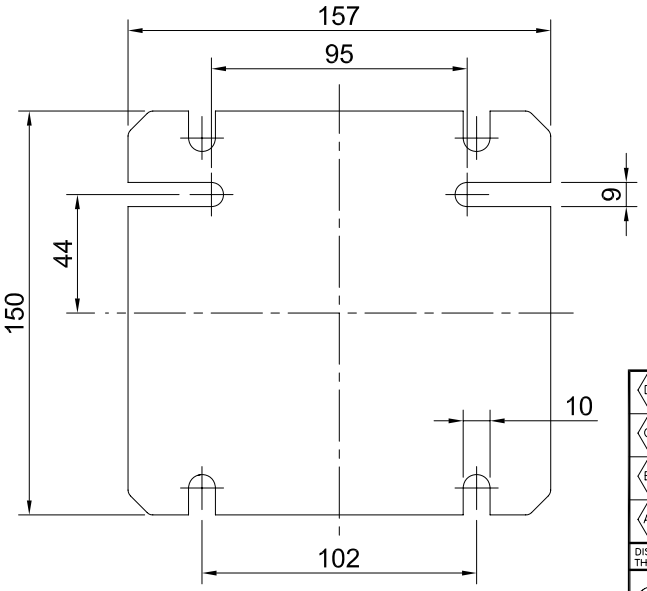


BASE BOTTOM VIEW
SCALE 2:1

| | | | | | | Three phase | | | | | Single phase | | | | |
|---|---|---|---|---|---|---|---|---|---|---|---|---|---|---|---|
| Mat testata Liquid end mat | Diam pistone Plunger diam | A[mm] | B[mm] | C (BSP) | T[mm] | Motore 4P Motor 4P [kW] | Gr. motore Motor Size | D[mm] | E[mm] | F[mm] | Motore 4P Motor 4P [kW] | Gr. motore Motor Size | D[mm] | E[mm] | E[mm] |
| AISI316 (21) | 25 | 121 | 258 | 3/8" f | 68 | 0.25 | 71 B5 | 385 | 443 | 187 | 0.37 | 71 B5 | 385 | 455 | 187 |
| | 30 | 122 | 258 | 3/8" f | 68 | 0.25 | 71 B5 | 385 | 443 | 187 | 0.37 | 71 B5 | 385 | 455 | 187 |
| | 38 | 164 | 268 | 1/2" f | 88,5 | 0.37 | 71 B5 | 385 | 455 | 187 | 0.55 | 80 B14 | 398 | 498 | 197 |
| | 48 | 164 | 268 | 1/2" f | 88,5 | 0.55 | 80 B14 | 398 | 470 | 197 | 0.75 | 80 B14 | 398 | 498 | 197 |
| | 54 | 176 | 268 | 1/2" f | 108 | 0.55 | 80 B14 | 398 | 472 | 197 | 0.75 | 80 B14 | 398 | 500 | 197 |
| | 64 | 195 | 273 | 3/4" f | 103 | 0.75 | 80 B14 | 398 | 491 | 197 | 1,10 | 80 B14 | 412 | 523 | 197 |
| | 76 | 241 | 288 | 1" f | 112 | 0.75 | 80 B14 | 398 | 510 | 197 | 1,10 | 80 B14 | 412 | 542 | 197 |
| | 89 | 253 | 288 | 1" f | 125 | 0.75 | 80 B14 | 398 | 510 | 197 | 1,10 | 80 B14 | 412 | 542 | 197 |
| PVC (31) | 25 | 179 | 258 | 3/8"f | 78 | 0.25 | 71 B5 | 385 | 453 | 187 | 0.37 | 71 B5 | 385 | 465 | 187 |
| | 30 | 178 | 258 | 3/8" f | 78 | 0.25 | 71 B5 | 385 | 453 | 187 | 0.37 | 71 B5 | 385 | 465 | 187 |
| | 38 | 200 | 268 | 3/8" f | 98 | 0.37 | 71 B5 | 385 | 467 | 187 | 0.55 | 80 B14 | 398 | 510 | 197 |
| | 48 | 244 | 268 | 1/2" f | 108 | 0.55 | 80 B14 | 398 | 483 | 197 | 0.75 | 80 B14 | 398 | 511 | 197 |
| | 54 | 253 | 268 | 1/2" f | 118 | 0.55 | 80 B14 | 398 | 483 | 197 | 0.75 | 80 B14 | 398 | 511 | 197 |
| | 64 | 273 | 273 | 3/4" f | 118 | 0.75 | 80 B14 | 398 | 493 | 197 | 1,10 | 80 B14 | 412 | 525 | 197 |
| | 76 | 299 | 288 | 1" f | 148 | 0.75 | 80 B14 | 398 | 513 | 197 | 1,10 | 80 B14 | 412 | 545 | 197 |
| | 89 | 309 | 288 | 1" f | 158 | 0.75 | 80 B14 | 398 | 513 | 197 | 1,10 | 80 B14 | 412 | 545 | 197 |

| | | | |
|---|---|---|---|
| D | DIS–Draw | CON–Chk | DATA–Date |
| C | DIS–Draw | CON–Chk | DATA–Date |
| B | DIS–Draw | CON–Chk | DATA–Date |
| A | DIS–Draw | CON–Chk | DATA–Date |

DISEGNO ESEGUITO CON CAD, NON SONO AMMESSE MODIFICHE A MANO. COPIA NON SOGGETTA AD AGGIORNAMENTO
THIS IS A CAD DRAWING , NO HAND MADE VARIATIONS ARE ALLOWED. THIS COPY WILL NOT BE UPDATED

MATERIALE :
Material :

CODICE GREZZO :
Raw mat. code :

TOLLERANZE GENERALI – General allowances: ISO 2768–mK

PESO Weight (kg):

SCALA : Scale : 1 : 4

DIS.–Draw.: WPI

DATA–Date: 20.09.2011

CONTR.–Check.: EDF

DATA–Date: 20.09.2011

APPR.–Appr.:

DATA–Date:

Process & Systems Division

KS2 Mettering pumps general arrangement

Dis. 1MV1_RM_V1 Rev. A

SOSTITUISCE
Replace

LE INFORMAZIONI CONTENUTE IN QUESTO DISEGNO COSTITUISCONO PROPRIETA' RISERVATA E NON POSSONO ESSERE DIVULGATE IN NESSUNA FORMA SENZA PREVENTIVA AUTORIZZAZIONE SCRITTA
This drawing contains proprietary informations that must not be disclosed in any form without prior written permission

SEKO S.p.A. 20068 Peschiera B. (MI) – ITALY Tel: +39 02 97372411– Fax: +39 02 55301744 – e–mail: info.psd@seko.com – www.seko.com