REVISIONS				
REV	DATE	DESCRIPTION	BY	APP.BY
△				
△				
△				

DRAWING NO. SA 900882△

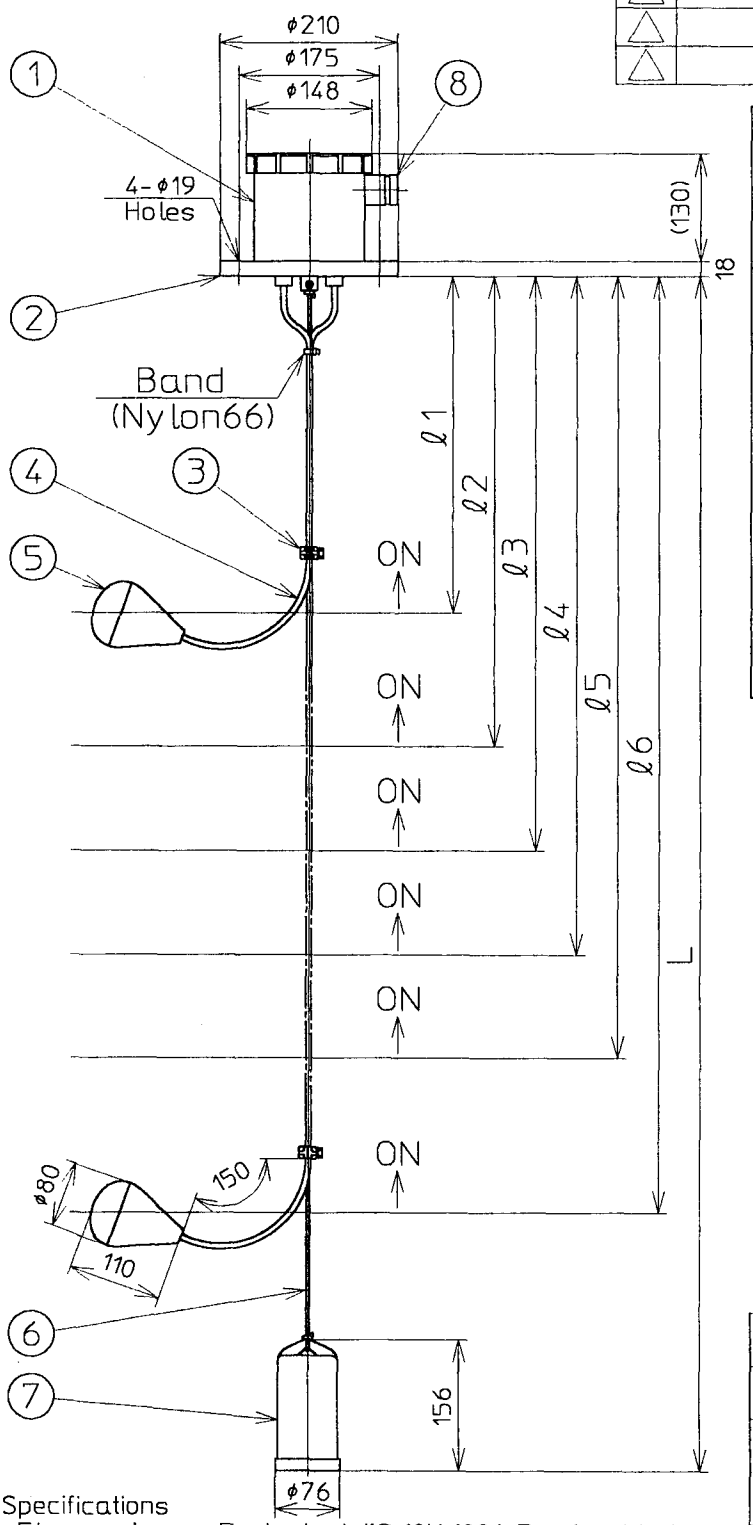

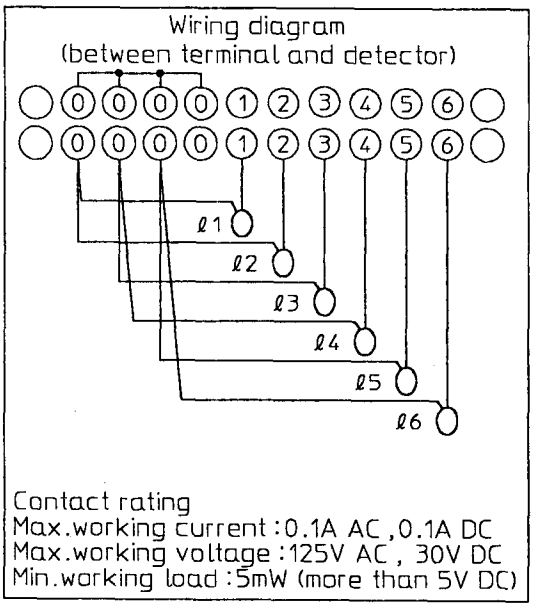

Tag No.			
L			
ℓ1			
ℓ2			
ℓ3			
ℓ4			
ℓ5			
ℓ6			
Qty.			

Specifications
- Flange size : Equivalent JIS 10K 100A Proviso 4 holes
- Cable inlet : Equivalent JIS F 20a (G 3/4)
- Protection : IP45
- Float withstand pressure : 200 kPa Max.
- Min. SG : 0.8
- Working temperature : -10 to 50 ℃ (No freezing under 0℃)
- Min. Dimensions of : ℓ1 = 200
  ℓ~ℓ = 210
  L~ℓ6 = 160

P.No.	Name	Qty.	Material
8	Cable gland	1	Brass (Nickel plating)
7	Anchor weight	1	PVC (Build in : Carbon steel)
6	Rope	1	PE
5	Float	6	ABS
4	Cable	6	PVC (VCTF2×0.75mm²)
3	Cable clip	6	PVC
2	Flange	1	PVC
1	Terminal box	1	ABS

DATE 04-19-'99	DR.BY Y. Nonaka	TITLE	OUTLINE DRAWING OF CABLE SUSPENDED FLOAT SENSOR
SCALE N.T.S.	CH.BY T. Horiuchi		
UNITS MILLIMTERS	APP.BY H. Mori	MODEL	FT55-6
NOHKEN	NOHKEN INC. OSAKA , JAPAN	DRAWING NO.	SA 900882△0